[redacted]

György Snell

Western Michigan University, Kalamazoo, MI
Advanced Light Source, Berkeley, CA

WESTERN MICHIGAN UNIVERSITY

[redacted]

1. **Introduction**
   - Motivation - examples at the ALS
   - Basics, history
2. **Mott scattering**
   - Theory
   - Calibration of Mott polarimeters
   - Instrumental asymmetry
3. **Mott polarimeters**
   - Conventional
   - Retarding field
   - TOF - Mott system
4. **Conclusion**

Polarization

- **Nuclear physics**
  - electrons from β-decay can be polarized due to parity nonconservation in weak interactions
  - high-energy electrons, longitudinally polarized
- **Collision physics**
- **Sources of polarized electrons**
  - polarizing an unpolarized beam: spin-orbit effect in scattering
  - polarization transfer: e.g. from circularly polarized light
  - prepared targets: polarized atoms, magnetic samples
- **Spin-resolved electron spectroscopy at the ALS**
  - J. Tobin, magnetic materials, BL 7.0, 4.0
  - C. Fadley, photoelectron diffraction, BL 9.3, 4.0
  - Z.X. Shen, Z. Hussain, highly correlated systems, BL 10.0
  - N. Berrah, atomic & molecular physics, BL 10.0, 4.0

Basics

- **Spin polarized electron beam:** *the two possible spin states with respect to a reference direction are not equally populated*

N^+, N^-: number of e. parallel/antip. to ref. dir. (i.e. spin component is $+\hbar/2$ or $-\hbar/2$)

$$P = \frac{N^+ - N^-}{N^+ + N^-}$$

- **Stern-Gerlach experiment for electrons is not possible:**
  - e. beam has finite width due to H.U.
  - electrons have charge -> Lorentz force smears out spin splitting

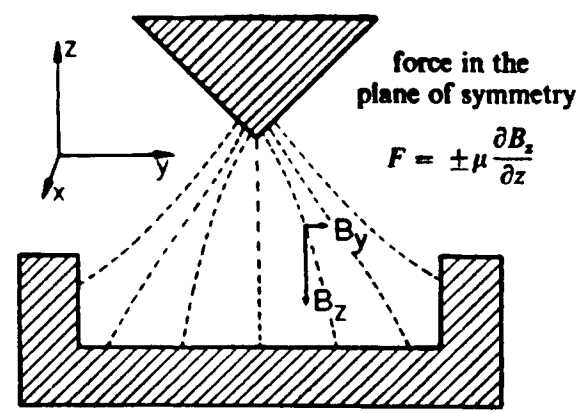

- **Mott predicted:** *spin dependent asymmetry during the scattering of medium energy (~100 keV) electrons from heavy nuclei*

Theory of Mott Scattering

- **Spin-orbit term in scattering potential:**

$$V_{so} \sim \mathbf{L} \cdot \mathbf{S}$$

- **Spin-dependent scattering cross section:**

$$\sigma(\Theta) = I(\Theta)\,[1 + S(\Theta)\,\mathbf{P} \cdot \mathbf{n}]$$

$S(\Theta)$ - asymmetry function (Sherman f.)
P - electron polarization
n - unit vector normal to s. plane

- **Asymmetry A enables spin measurement:**

$$A = \frac{I_L - I_R}{I_L + I_R} = P\,S(\Theta)$$

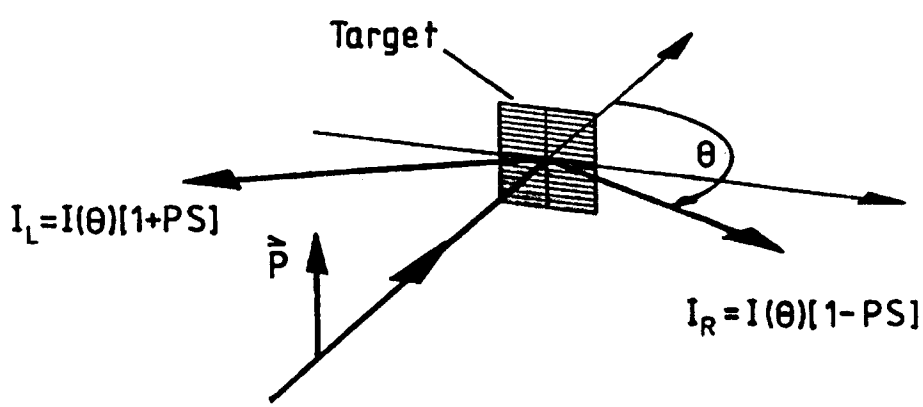

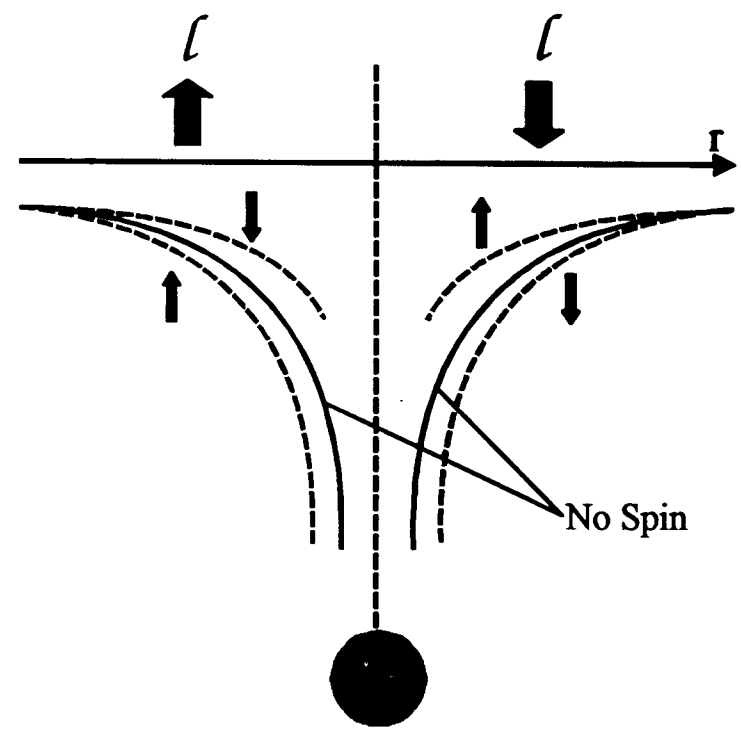

Scattering potential for electrons with spin-up or spin-down due to the spin-orbit interaction

[illegible] of a single a[illegible]

$$\Delta P_{syst} = \frac{A}{S^2}\Delta S \qquad \Delta P_{stat} \approx \frac{1}{S\sqrt{I/I_0}}\,\frac{1}{\sqrt{tI_0}}$$

- **A** - measured asymmetry
- **S** - Sherman function
- **I/I_0** - transmission
- **t** - acquisition time

- **$\Theta \approx 120^\circ \pm 15^\circ$**
- **lower E: -> higher cross section**
  -> lower $S(\Theta)$
  -> higher efficiency
- **multiple scattering:**
  -> energy loss
  -> effective Sherman function S_{eff}

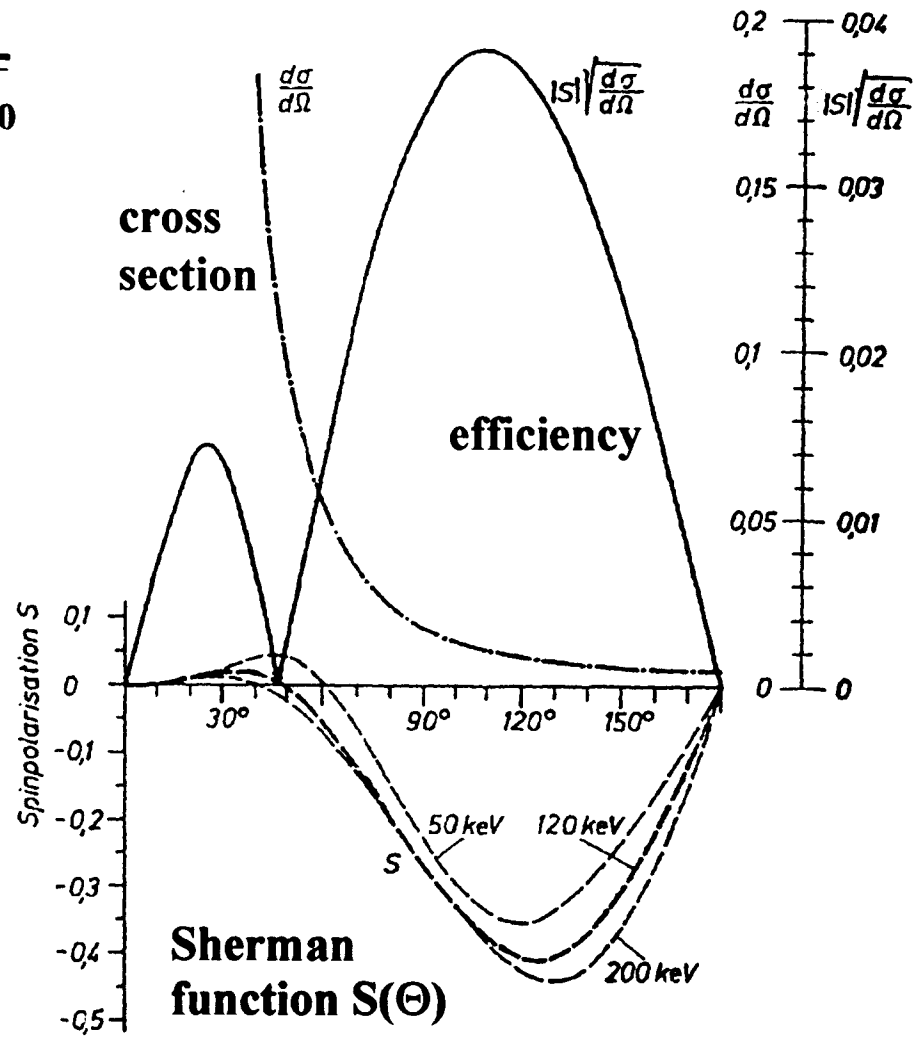

[illegible]onal Mott polar

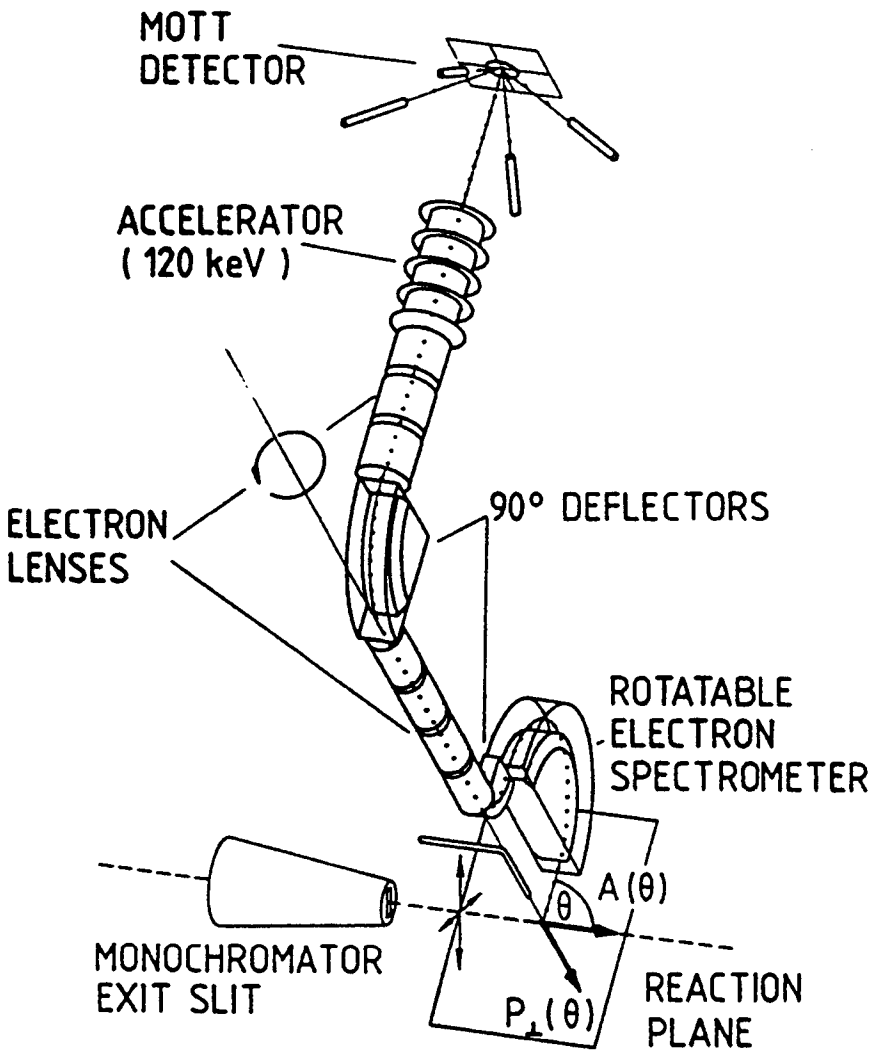

Mott system at BESSY I

- **Bulky, permanent setup**
- **High voltage: 100-120kV, discharge, safety**
- **Detection electronics floating on HV, fiber optic decoupling**
- **Gold foils as targets (50-250 nm thin)**
- **High efficiency (>10^{-4}) and analyzing power ($S_{eff} \approx 0.25$):**
- **No discrimination against inelast. scattered electrons**

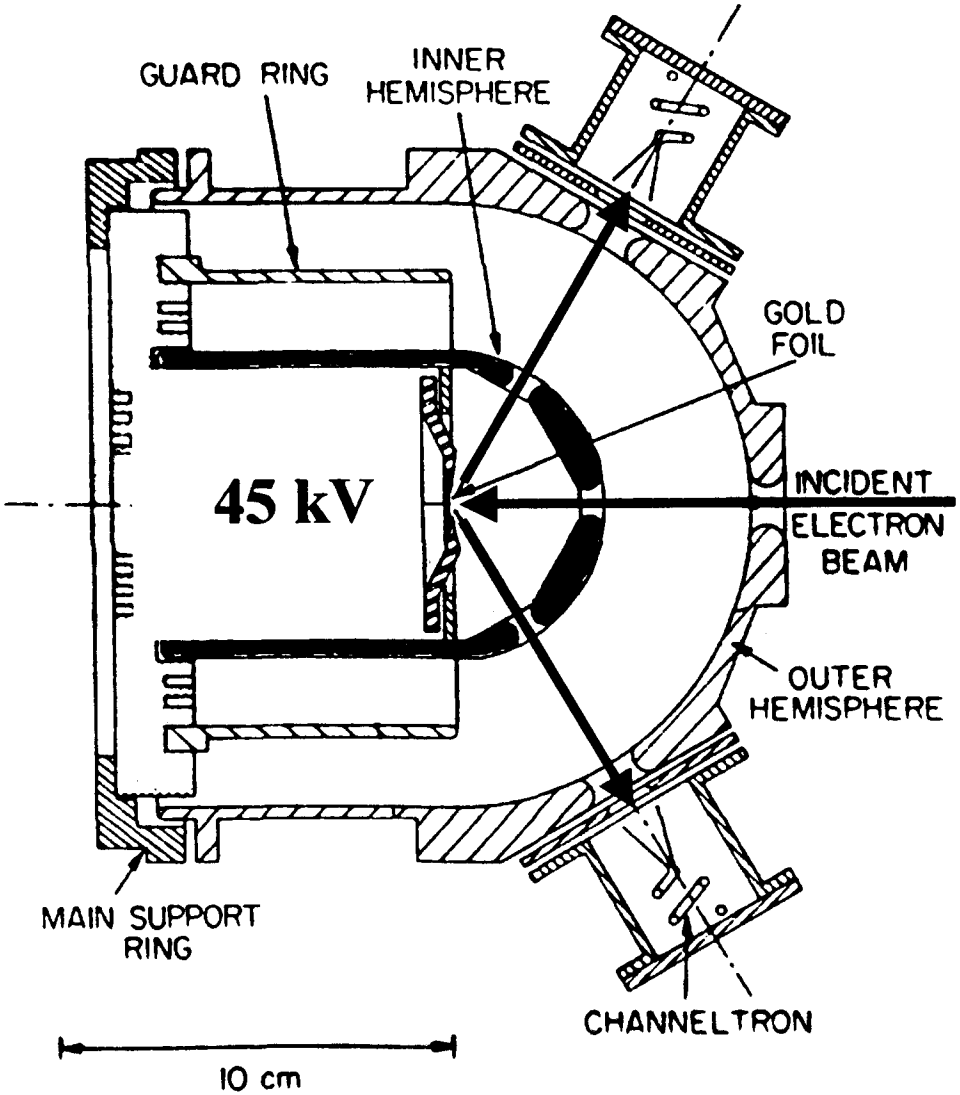

Gray *et al.*, Rev. Sci. Instrum. **55**, 88 (1984)

- **Acceleration/deceleration between 2 spherical electrodes**
- **Detectors & electronics on ground potential**
- **Good discrimination against inelast. scattered electrons**
- **Bulk targets (Au, Th, U)**
- **Focusing onto target**
- **Medium energy: 20-45 keV**
- **Small, transportable (SR)**

[illegible]ding-field [illegible]

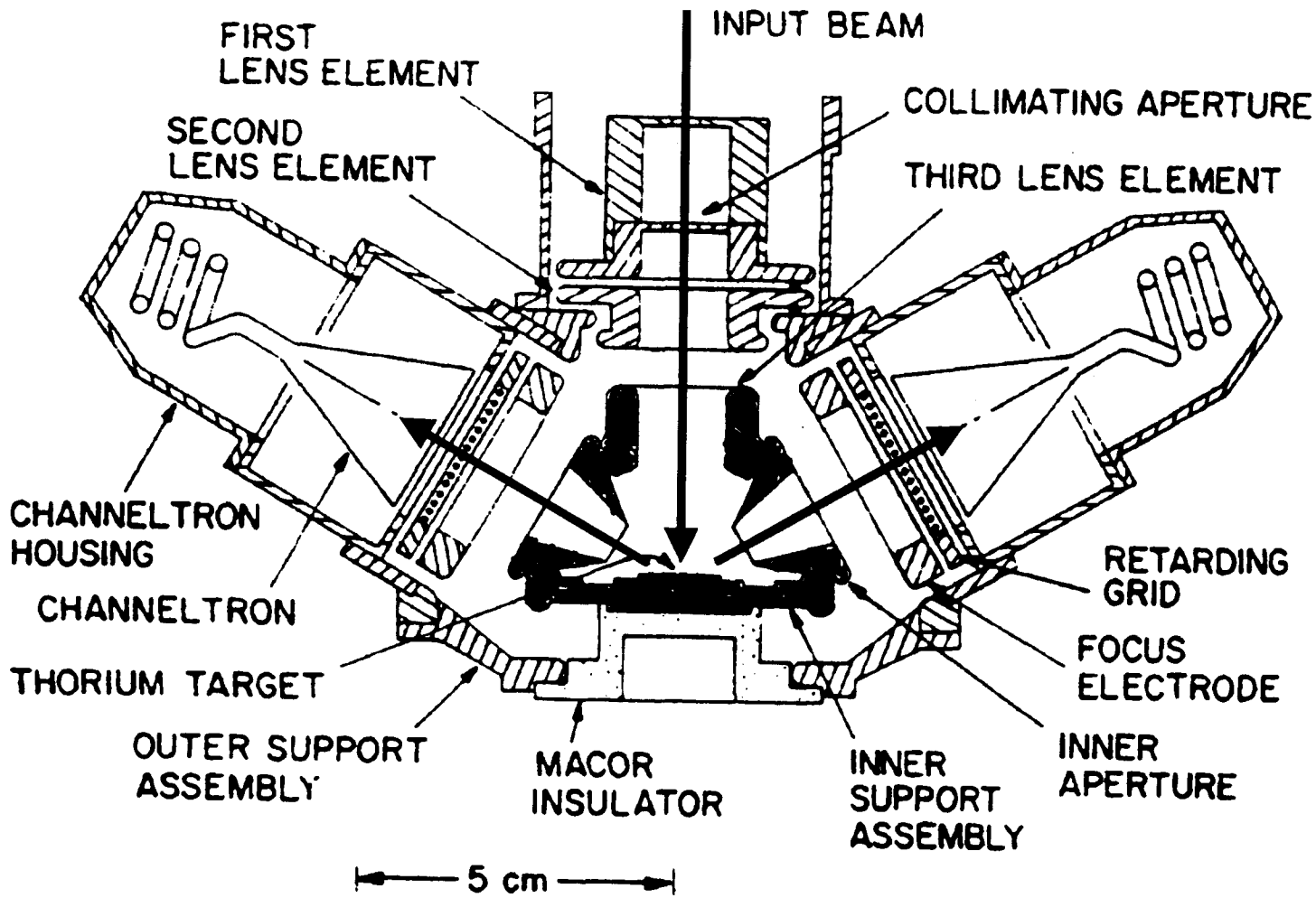

Design: B. Dunning, Rice Univ., Houston, TX

Mott-polarim

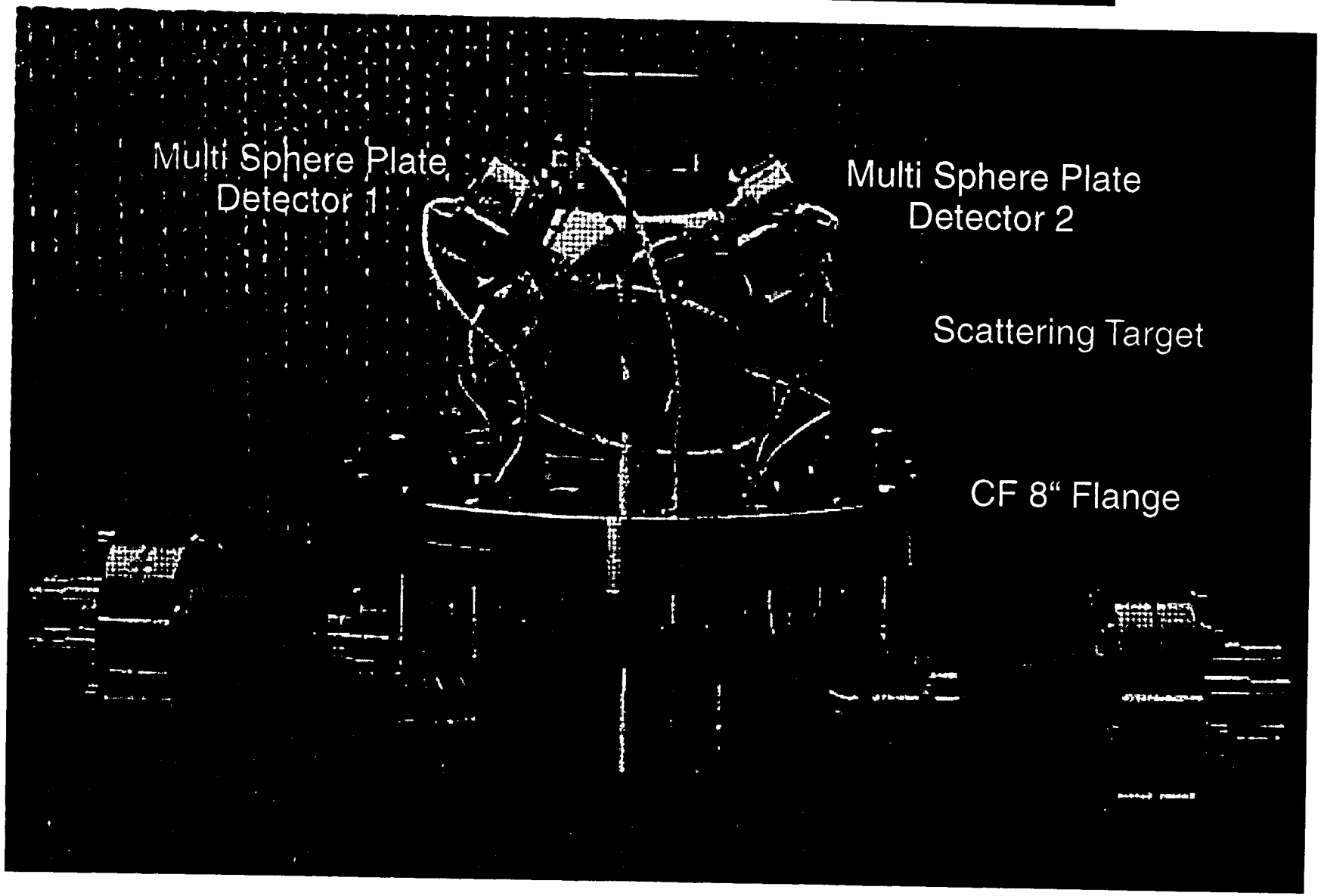

Experimental Setup

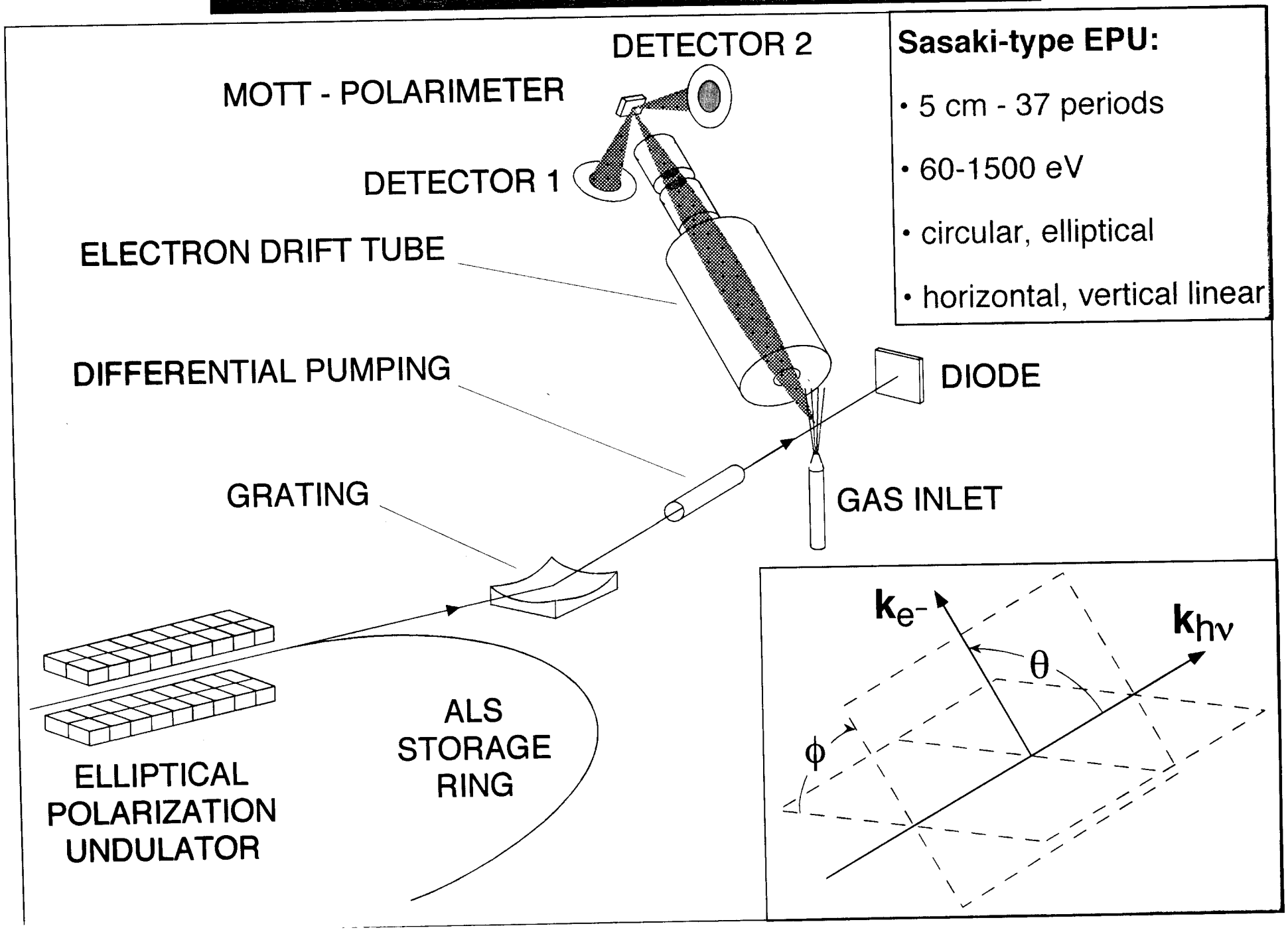

Sasaki-type EPU:

- 5 cm - 37 periods
- 60-1500 eV
- circular, elliptical
- horizontal, vertical linear

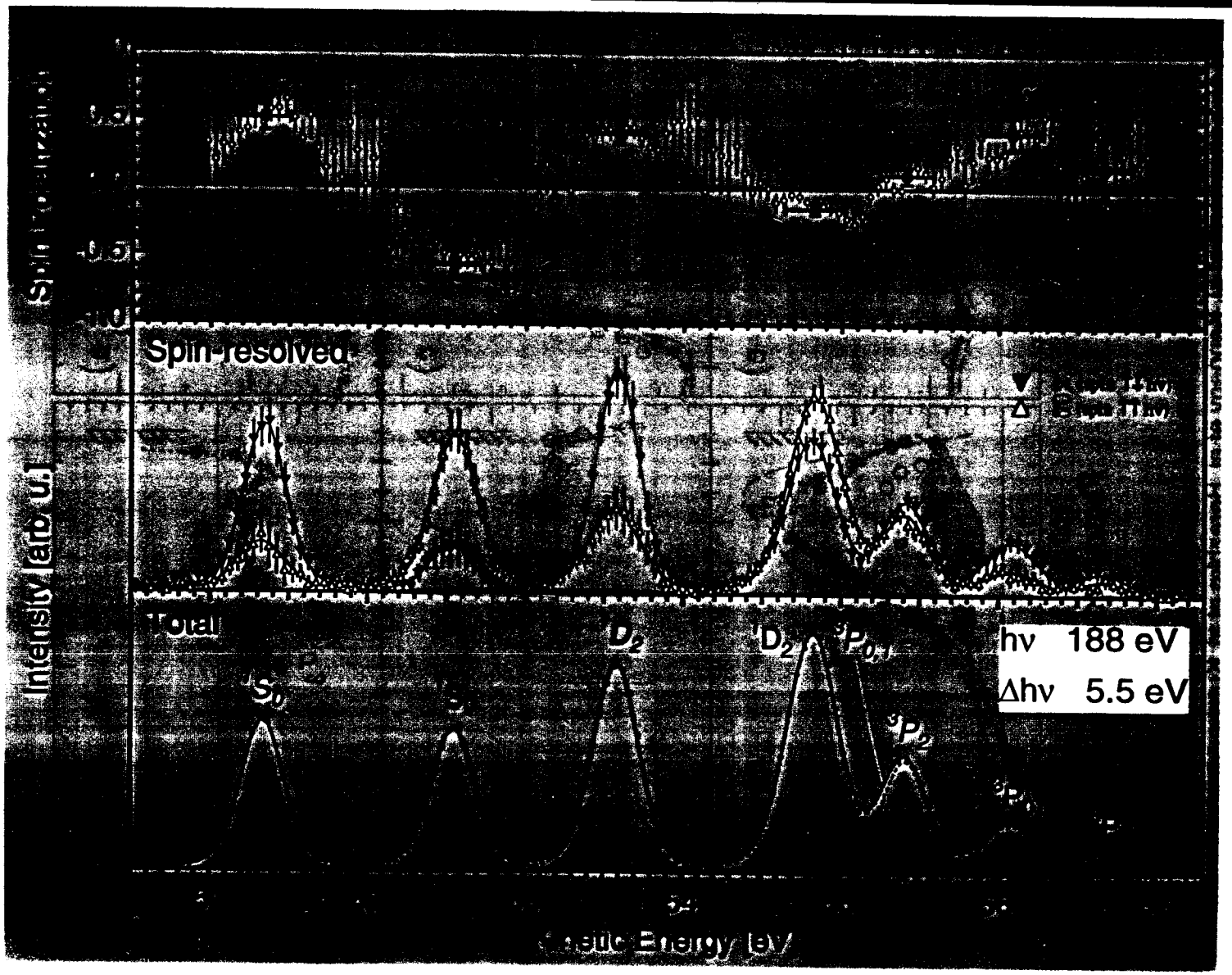
Spin-resolved
Total
hν 188 eV
Δhν 5.5 eV
Intensity (arb. u.)
Kinetic Energy (eV)

Calibration

- **Beam with known polarization**
  - photoemission/photoionization
  - GaAs sources ($P \approx 83$ %)
- **Double scattering experiment**
  - 2 identical processes -> $A = S_{eff}^2$
- **Calculated values**
  - extrapolation to very thin target -> measurements with different foil thicknesses necessary
- **Accuracies**
  - 1 % unusual
  - 2-5 % very good
  - 10-15 % reality

Instrumental asymmetry

- **Beam misalignment**
- **Different detector efficiencies**
- **Spurious background**
- **Solutions:**
  - P -> –P (same path)
  - unpolarized beam (same path)
  - rotating polarimeter 180° (only for det. efficiencies)
  - low-Z scatterer $S_{eff}=0$ (changing mechanism)
  - forward scattering detectors $S_{eff}\approx 0$

Sir Neville Mott

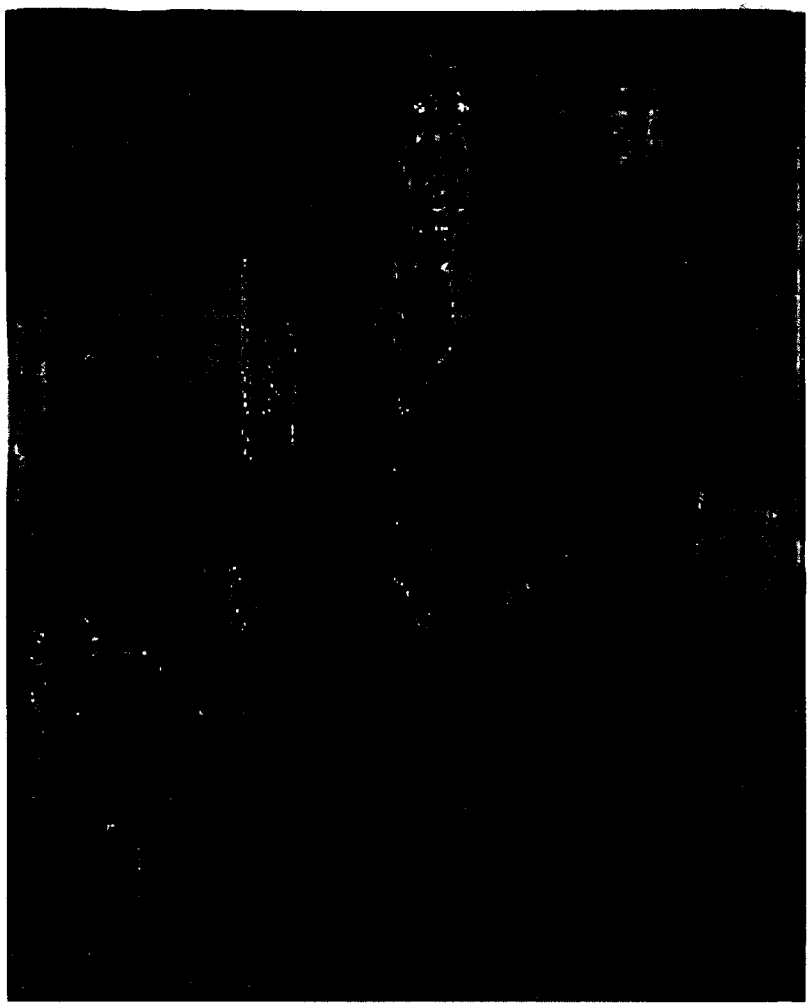

N. Mott in Daresbury in 1995

- **1905 - 1996**
- **1929 - discovers Mott scattering**
- **1942 - Mott scattering is observed**
- **1962 - knighted**
- **1977 - Nobel prize in physics**
  "for his independent research on the magnetic and electrical properties of amorphous semiconductors"

[illegible]

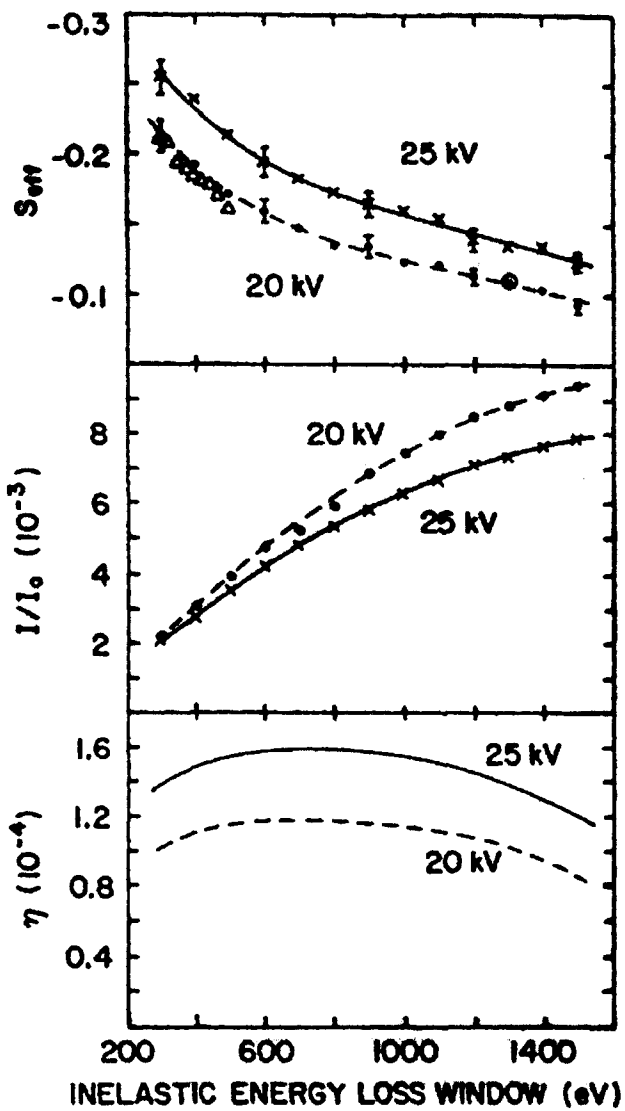

- **Micro sphere plate (MSP) detectors**
  - time resolution (100 ps)
  - small
  - less efficient (2)
- **Thorium target**
- **25 keV scattering energy**
- **S_{eff} = -0.13 … -0.16** (±10-20%)

- **Calibration:**
  - Xe $5p_{1/2}$ @ 56 eV lin. pol., P=1
- **Instrumental asymmetry:**
  - atomic s-photolines: P=0
  - changing helicity
  - horizontal-vertical linear pol.

Introduction

- **Mott polarimeters are the workhorses of spin-resolved electron spectroscopy in a wide variety of fields**
- **Conventional polarimeters:**
  - bulky, hard to use, good efficiency
- **Compact, retarding-field polarimeters:**
  - small, robust and easy to use
  - good efficiency
  - channeltron, MCP, MSP electron detectors
  - electrostatic and TOF spectrometers
- **Critical issues with electron polarimeters:**
  - calibration of the analyzing power S_{eff}
  - instrumental asymmetries
- **Other types of polarimeters**

References

- J. Kessler, *Polarized Electrons*, Springer, Berlin (1985)
- J. Kirschner, *Polarised Electrons at Surfaces*, Springer, Berlin (1985)
- T. J. Gay and F. B. Dunning, *Mott electron polarimetry*
  Rev. Sci. Instrum. 63, 1635 (1992).
- G. C. Burnett, T. J. Monroe, and F. B. Dunning
  High-efficiency retarding-potential Mott polarization analyzer
  Rev. Sci. Instrum. 65, 1893 (1994).
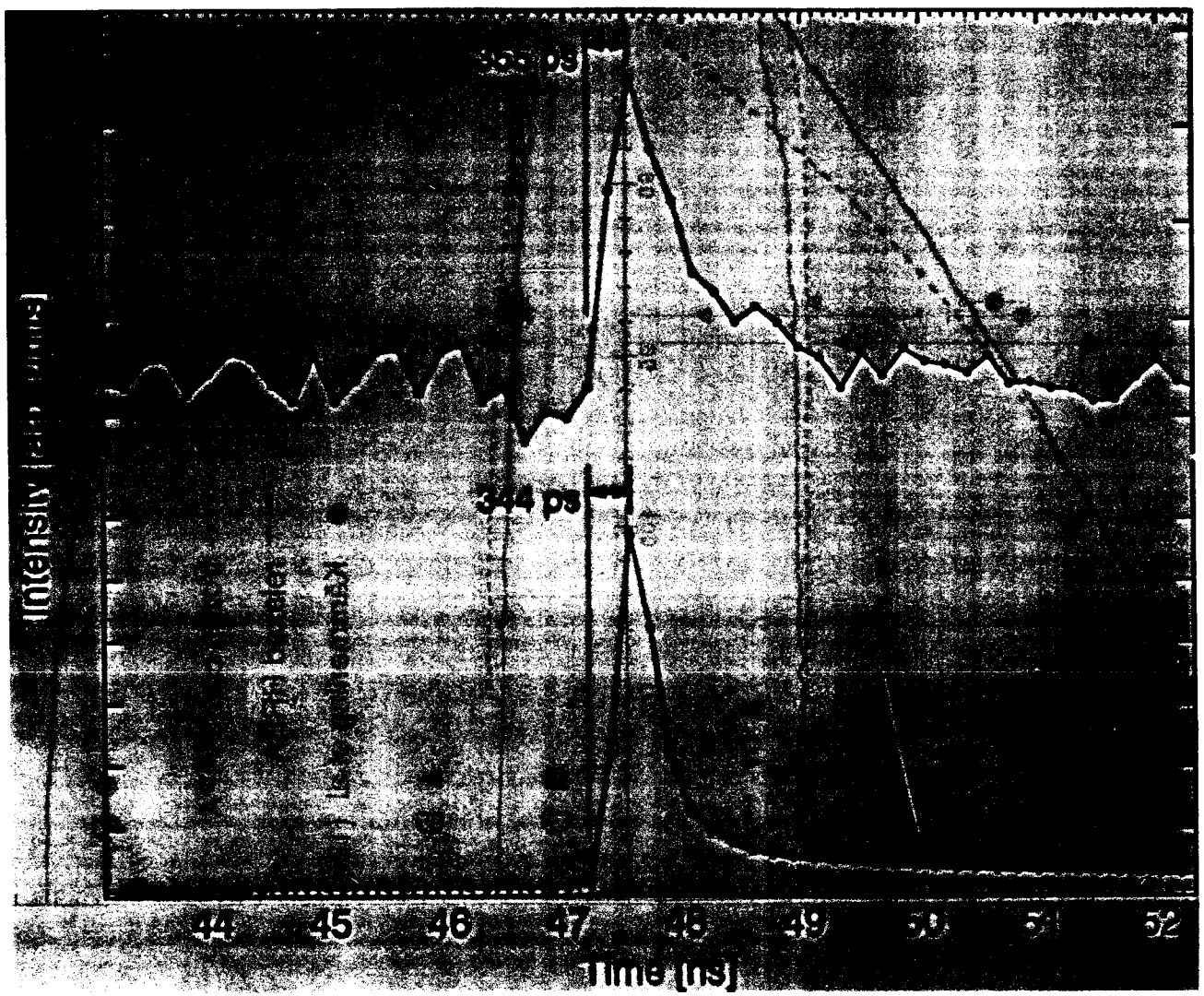
...ution of the TOF-M...